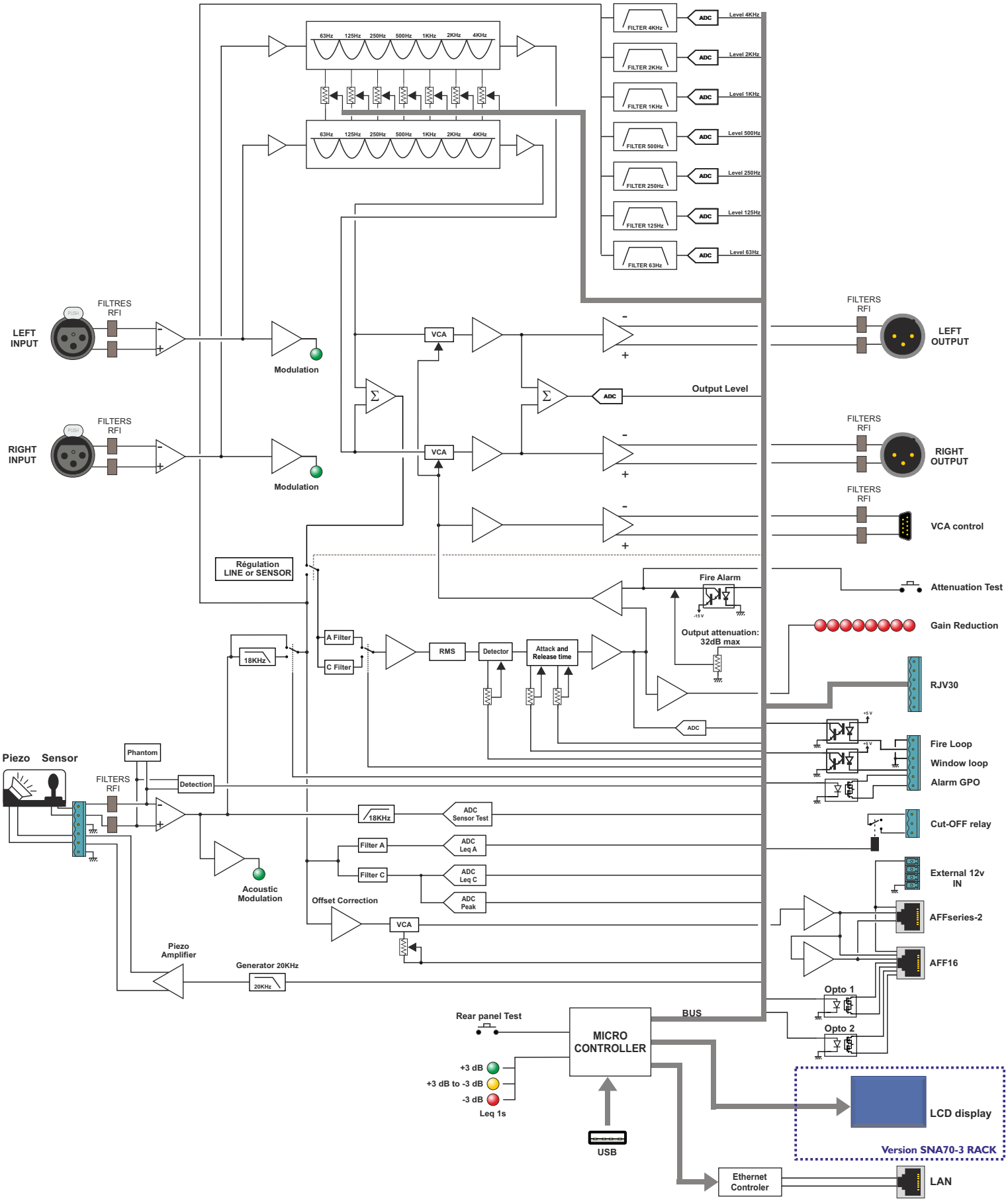
63Hz
125Hz
250Hz
500Hz
1KHz
2KHz
4KHz
FILTER 4KHz
FILTER 2KHz
FILTER 1KHz
FILTER 500Hz
FILTER 250Hz
FILTER 125Hz
FILTER 63Hz
ADC
Level 4KHz
Level 2KHz
Level 1KHz
Level 500Hz
Level 250Hz
Level 125Hz
Level 63Hz
LEFT INPUT
RIGHT INPUT
FILTRES RFI
FILTERS RFI
Modulation
VCA
Σ
Output Level
LEFT OUTPUT
RIGHT OUTPUT
VCA control
Régulation LINE or SENSOR
Fire Alarm
Attenuation Test
Gain Reduction
Output attenuation: 32dB max
A Filter
C Filter
18KHz
RMS
Detector
Attack and Release time
RJV30
Fire Loop
Window loop
Alarm GPO
Cut-OFF relay
External 12v IN
AFFseries-2
AFF16
Opto 1
Opto 2
Piezo Sensor
Phantom
Detection
ADC Sensor Test
Filter A
Filter C
ADC Leq A
ADC Leq C
ADC Peak
Acoustic Modulation
Offset Correction
Piezo Amplifier
Generator 20KHz
20KHz
Rear panel Test
MICRO CONTROLLER
BUS
+3 dB
+3 dB to -3 dB
-3 dB
Leq 1s
USB
LCD display
Version SNA70-3 RACK
Ethernet Controler
LAN